START HERE!

READ ME FIRST

Don't be a hero and muscle through this installation without reading these fitting instructions first! Improper installation of this gear may void certain aspects of your warranty.

Before you begin, take a moment and open all your Front Runner Rack Kit boxes and gather the assembly instructions for the various components.

A complete kit will contain:

1. Front Runner Mounting System specific to your vehicle
2. Front Runner Rack Tray or Load Bar Slats

This document will guide you through the assembly of the Mounting System and assist you in fitting the Rack tray or Load Bars to your specific vehicle.

Please refer to the next page for a list of all the components, quantities and tools required.

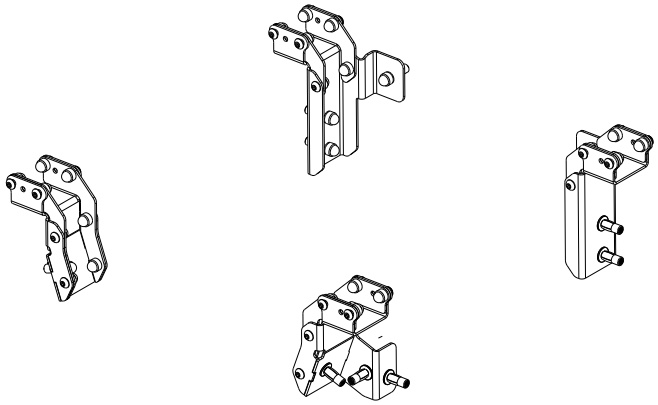

IMPORTANT WARNING! ⚠

IT IS CRITICAL THAT ALL FRONT RUNNER PRODUCTS BE PROPERLY AND SECURELY ASSEMBLED AND ATTACHED TO YOUR VEHICLE. IMPROPER ATTACHMENT COULD RESULT IN AN AUTOMOBILE ACCIDENT, AND COULD CAUSE SERIOUS BODILY INJURY OR DEATH. YOU ARE RESPONSIBLE FOR ASSEMBLING AND SECURING ALL FRONT RUNNER PRODUCTS TO YOUR VEHICLE, CHECKING THE ATTACHMENTS PRIOR TO USE, AND PERIODICALLY INSPECTING THE PRODUCTS FOR ADJUSTMENT, WEAR AND DAMAGE. THEREFORE, YOU MUST READ AND UNDERSTAND ALL OF THE INSTRUCTIONS AND PRECAUTIONS SUPPLIED WITH YOUR FRONT RUNNER PRODUCT PRIOR TO INSTALLATION OR USE. IF YOU DO NOT UNDERSTAND ALL OF THE INSTRUCTIONS AND CAUTIONS, OR IF YOU HAVE NO MECHANICAL EXPERIENCE AND ARE NOT THOROUGHLY FAMILIAR WITH THE INSTALLATION PROCEDURES, YOU SHOULD HAVE THE PRODUCT INSTALLED BY A PROFESSIONAL INSTALLER OR OTHER QUALIFIED PERSONNEL.

NOTE: Front Runner will not be responsible for any damage caused by the failure to install the product according to these instructions.

Please call us if you have any questions about the installation of this product.

 © 2023 FRONT RUNNER VEHICLE OUTFITTERS

1 GET ORGANIZED

IN THE BOX		PBFF001
1	2 X	REAR MOUNTING BRACKET
2	2 X	FRONT MOUNTING BRACKET
3	4 X	REAR GUSSET
4	4 X	FRONT GUSSET
5	12 X	M8 X 16 X 1.6 FLAT WASHER
6	12 X	M8 X 30 HEX BOLT
7	12 X	M8 PLUS NUT
8	12 X	M8 X 16 BUTTON HEAD SCREW
9	28 X	M8 NYLOC NUT
10	16 X	M8 X 20 BUTTON HEAD SCREW
11	40 X	M8 NUT CAPS
12	1 X	M8 x 70 HEX BOLT
13	1 X	M8 NORMAL NUT
14	2 X	M8 x 19 x 3 FLAT WASHER

TOOLS NEEDED

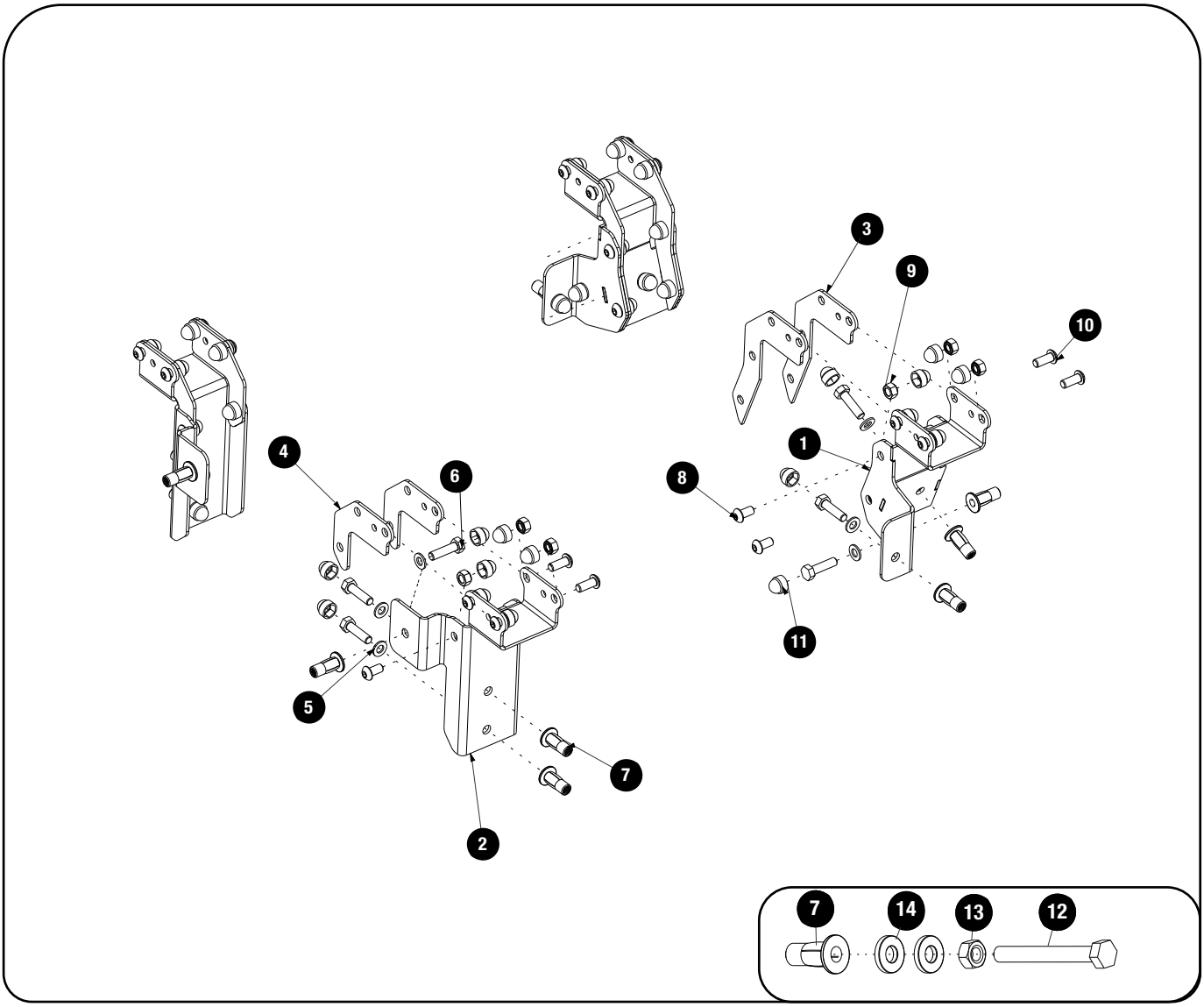

 © 2023 FRONT RUNNER VEHICLE OUTFITTERS

1 GET ORGANIZED

IN THE BOX		PBRA001
1	4 X	PRO BED RACK LEG
2	2 X	PRO BED RACK REAR BRACE
3	2 X	PRO BED RACK RH REAR WING BRACKET
4	2 X	PRO BED RACK TOP TRUSS
5	1 X	PRO BED RACK RH FRONT DIAGONAL BRACE
6	1 X	PRO BED RACK LH FRONT DIAGONAL BRACE
7	12 X	M6 x 16 BUTTON HEAD SCREW
8	22 X	M6 NYLOC NUT
9	22 X	M6 NUT CAP
10	16 X	M8 x 20 BUTTON HEAD SCREW
11	16 X	M8 x 19 x 2 FLAT WASHER
12	16 X	M8 NYLOC NUT
13	16 X	M8 NUT CAP

IN THE BOX		PBRA001
14	6 X	M6 x 12 BUTTON HEAD SCREW
15	2 X	FRONT HORIZONTAL BRACE
16	1 X	FRONT CENTER BRACE
17	4 X	M6 x 20 BUTTON HEAD SCREW
18	8 X	M6 x 12 x 1 FLAT WASHER
19	24 X	M6 x 25 THREAD FORMING SCREW
20	1 X	T30 6" TORX BIT

TOOLS NEEDED

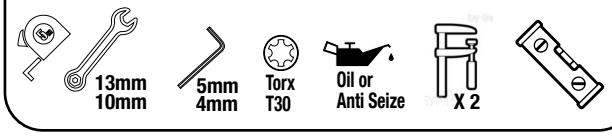

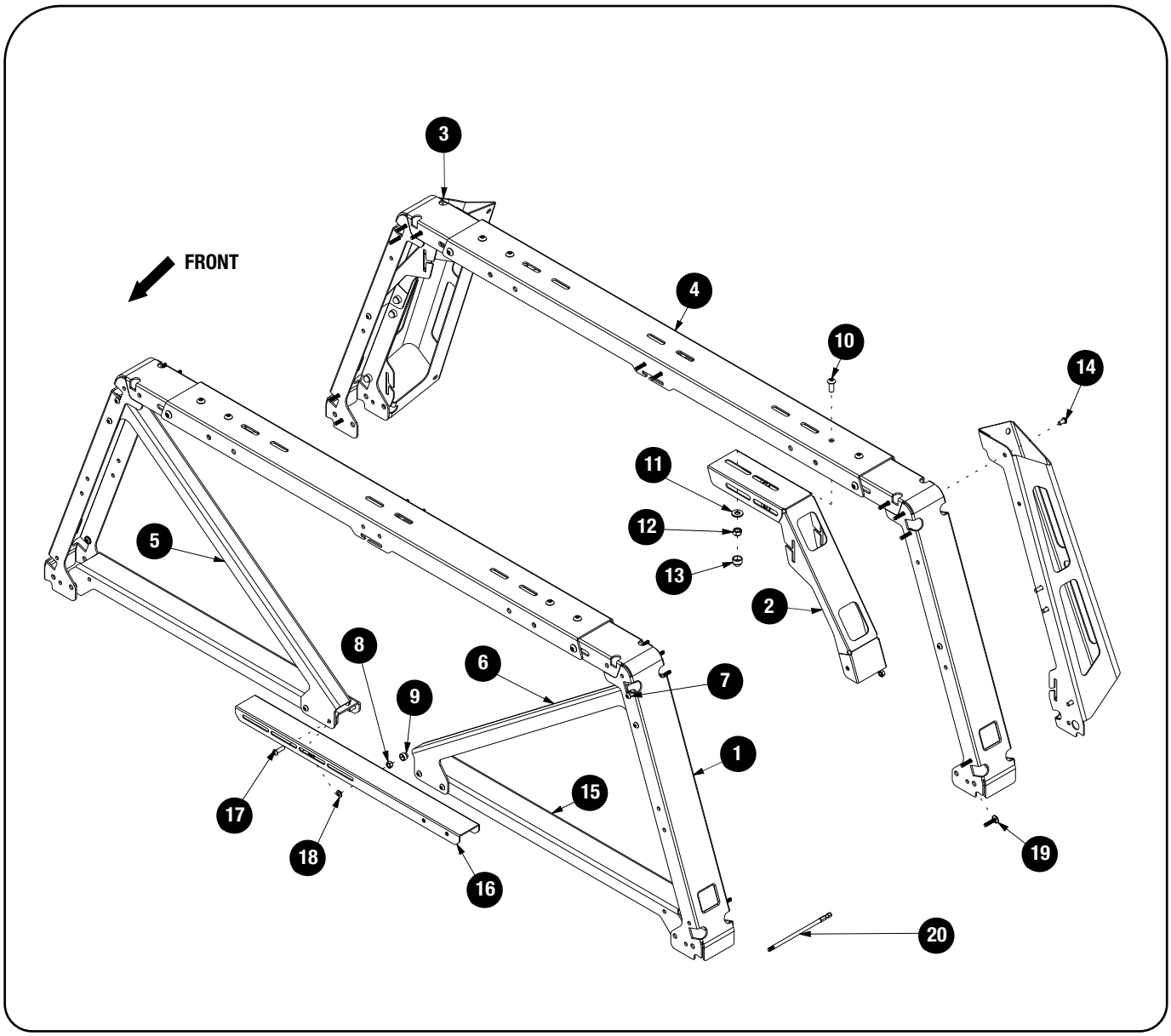

 © 2023 FRONT RUNNER VEHICLE OUTFITTERS

1 GET ORGANIZED

IN THE BOX		PBAL_1450
1	2 X	TOP EXTRUSION
2	1 X	TOP MIDDLE EXTRUSION
3	2 X	BOTTOM EXTRUSION
4	2 X	1450mm PSA STRIP PE60

TOOLS NEEDED

Friend

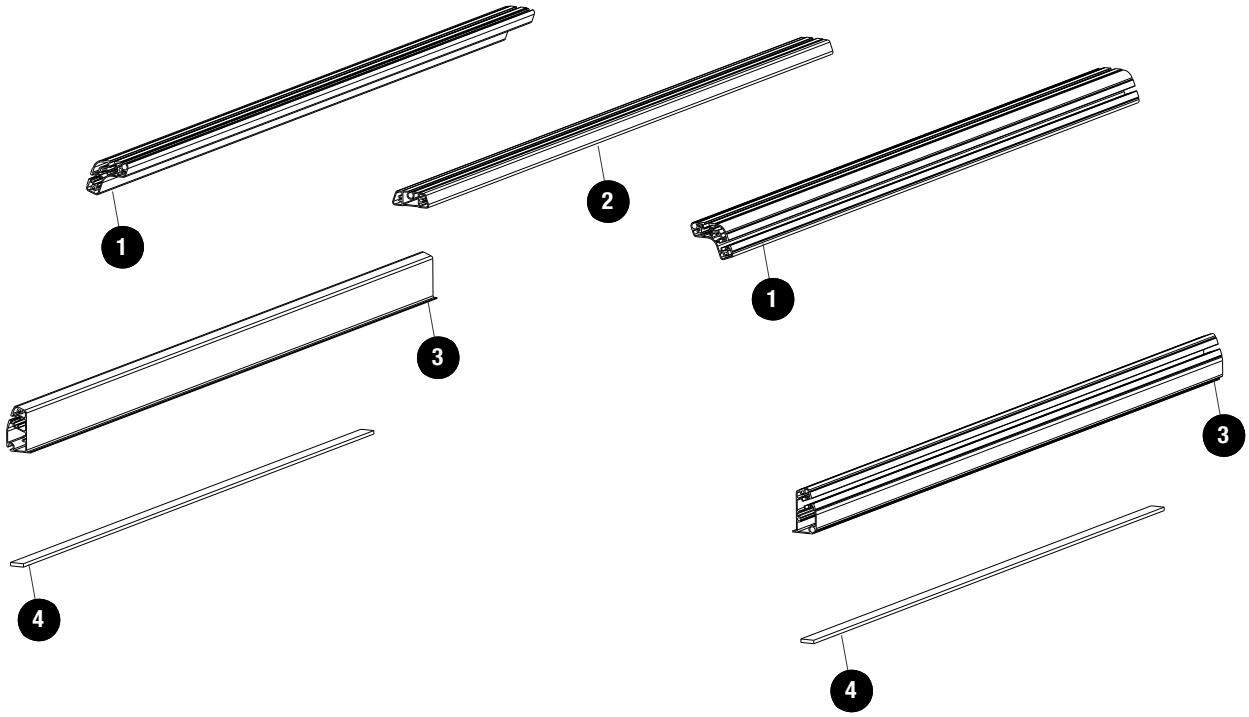

 © 2023 FRONT RUNNER VEHICLE OUTFITTERS

2 FIT AND SECURE

2.1

Place the front mounting brackets (LH shown) on the bed top ledge. Mark the 3 mounting holes per side.

Use a 4mm bit and drill a pilot hole before opening to 11.5mm.

Insert a Plus Nut (Item 7) into the holes drilled in 2.1.

Use a ratchet and 13mm socket and place the socket onto the M8 x 70 Hex bolt and tighten the M8 Nut using a 13mm spanner and pull the plus nut all the way up.See assembly of the plus nut as shown.

Check youtube for assistance in setting a plus nut.

DO NOT FIT THE BRACKETS AT THIS STAGE.

2.2

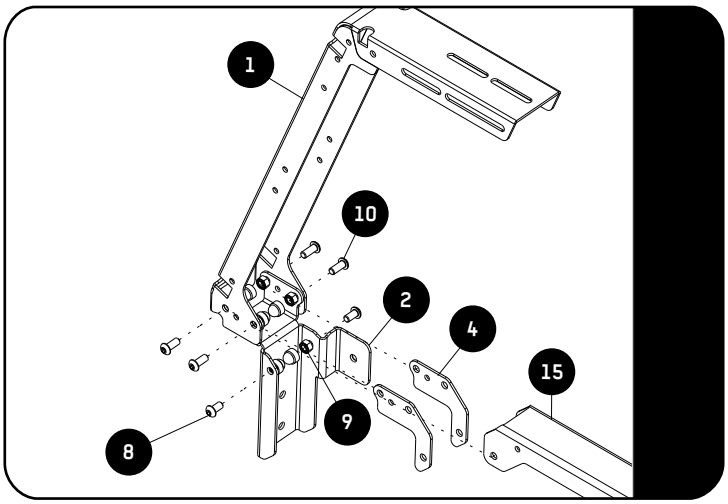

Assemble the Pro Bed Leg (Item 1) to the Front Mounting Brackets (Item 2) and the Front Horizontal Brace and Front Gusset (Item 4 & 15) using M8 x 20 button Head screws and M8 Nyloc Nuts (Item 9 & 10).

Loosely fit the M8 x 16 Button Head screws and M8 Nyloc Nuts (Item 8 & 9) as shown.

Do this with both the LH and RH side.

DO NOT FULLY TIGHTEN.

2.3

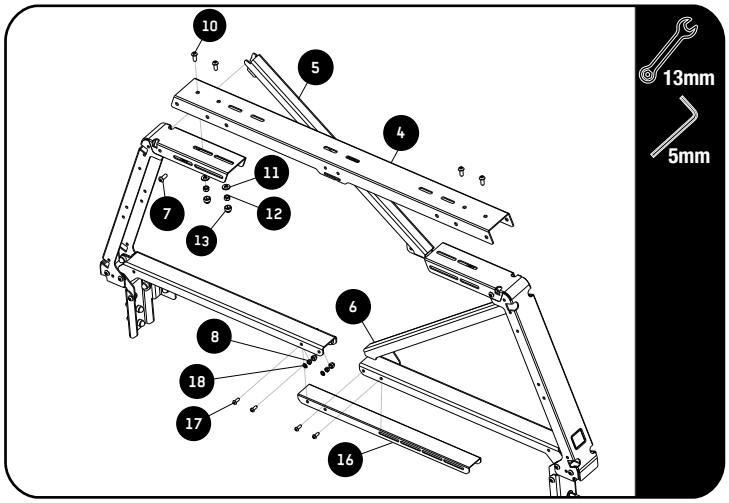

Assemble the Front Diagonal and Horizontal Brace parts as shown (Item 4,5 & 6) to the legs fitted in 2.2 using the M8x20 Button head screws,M8x19x2 Flat washer and M8 Nyloc Nut (Item 10,11 &12).

FULLY TIGHTEN.

Use the M6x20 Button head Screws,M6x12x1 Flat washer and M6 Nyloc Nut (Item 8,17 & 18)to fit the Front Center Brace to the LH and RH Front Horizontal Braces (Item 16).

DO NOT FULLY TIGHTEN

Place the assembly on a suitable surface for fitting the extrusions next.

© 2023 FRONT RUNNER VEHICLE OUTFITTERS

2 FIT AND SECURE

2.4

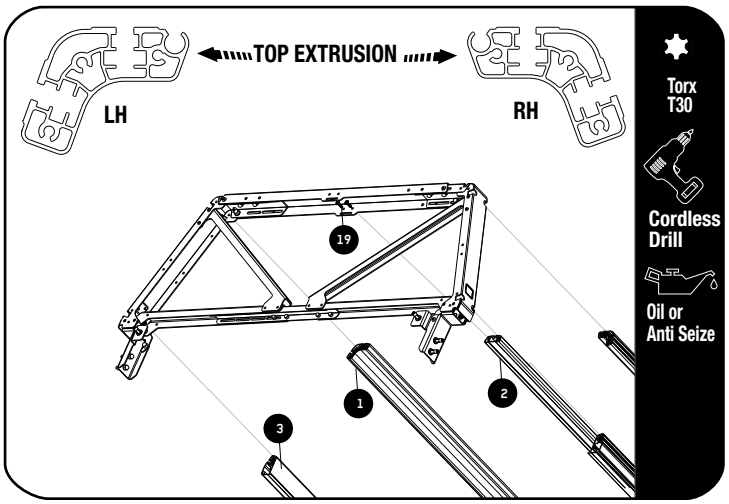

Take note of extrusion orientation !

Using the supplied T30 6" torx bit and a cordless driver fit the extrusion using the M6x25 thread forming screws (Item 19).Use a slow and constant speed when using the cordless driver.

Use a little anti seize or oil on screw threads before inserting. Note these are Thread Forming Screws.

Tightening Torque 25Nm / 18.4 ft lbs

2.5

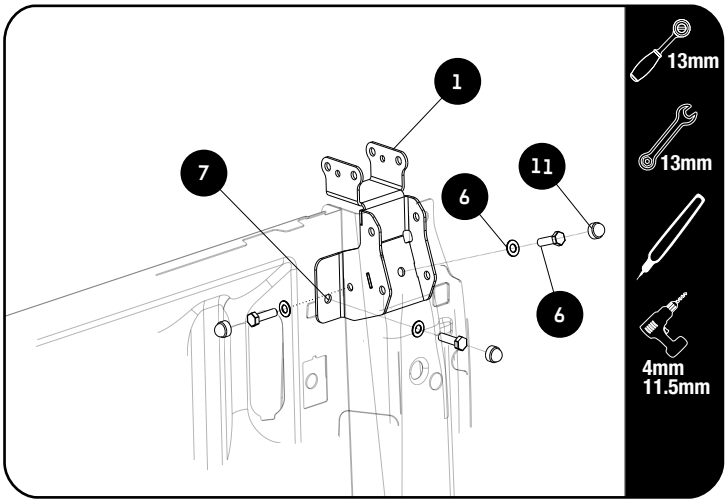

Position the Rear mounting brackets (Item 1) onto the load bed and mark the 3 mounting holes.Do this on both the LH and RH side

Use a 4mm bit and drill a pilot hole before opening to 11.5mm.

Insert the Plus Nuts (Item 7) into the holes drilled in 2.1.

Use a ratchet and 13mm socket and place the socket onto the M8 x 70 Hex bolt and tighten the M8 Nut using a 13mm spanner and pull the plus nut all the way up.See assembly of the plus nut as shown.

Loosely fit the bracket into place using M8 x 30 Hex bolts and M8 x 19 x 3 Flat washers (Item 5 & 6).

2.6

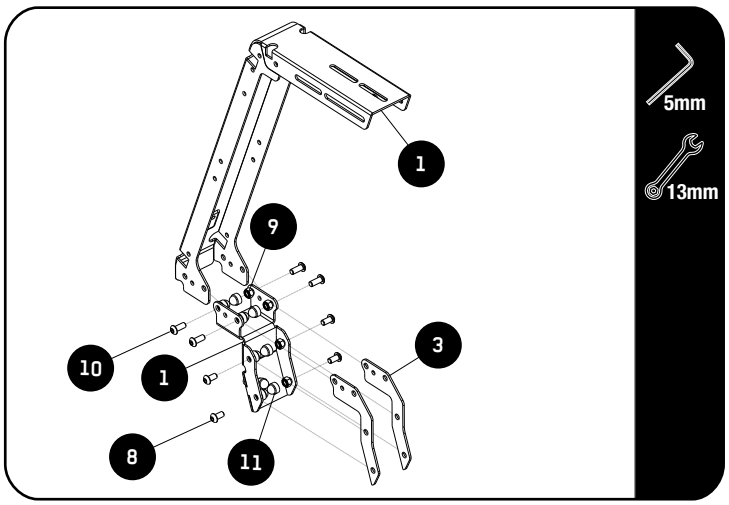

Assemble the Pro Bed Leg (Item 1) to the Rear Mounting Bracket (Item 1) together with the Rear Gusset (Item 3 using M8 x 20 button Head screws and M8 Nyloc Nuts (Item 9 & 10).

Loosely fit the M8 x 16 Button Head screws and M8 Nyloc Nuts (Item 8 & 9) as shown.

Do this on both the LH and RH side.

Fully Tighten.

Tightening Torque:

M8 : 15-20Nm / 11.06 ft lb - 14.75 ft lb

© 2023 FRONT RUNNER VEHICLE OUTFITTERS

2 FIT AND SECURE

2.7

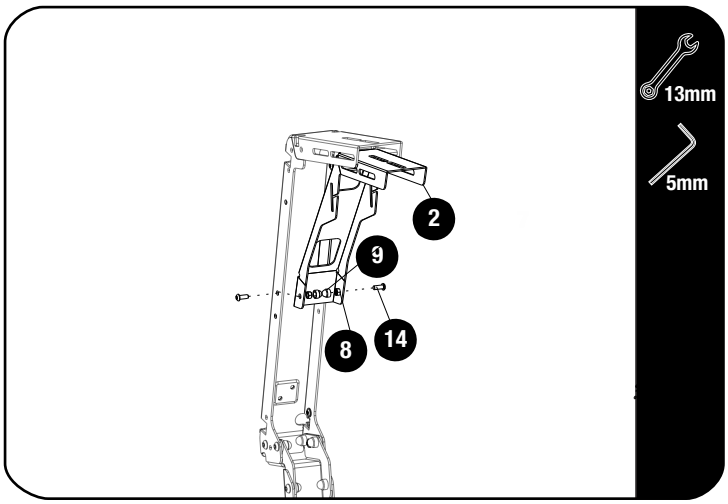

Fit the Rear Brace (Item 2) using the M6x12 button head screws and M6 Nyloc nuts (Item 14 & 8).

Fully tighten and place M6 Nut caps (Item 9) on the M6 Nyloc Nuts

Tightening Torque:

M8 : 15-20Nm / 11.06 ft lb - 14.75 ft lb

2.8

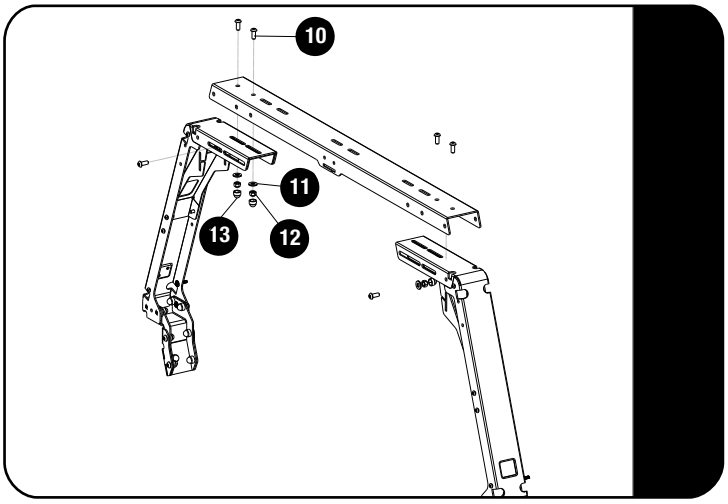

Loosely assemble the rear top truss using the M8x20 Button head screws, M8x19x2 Flat washer and M8 Nyloc Nuts (Item 10,11&12).

2.9

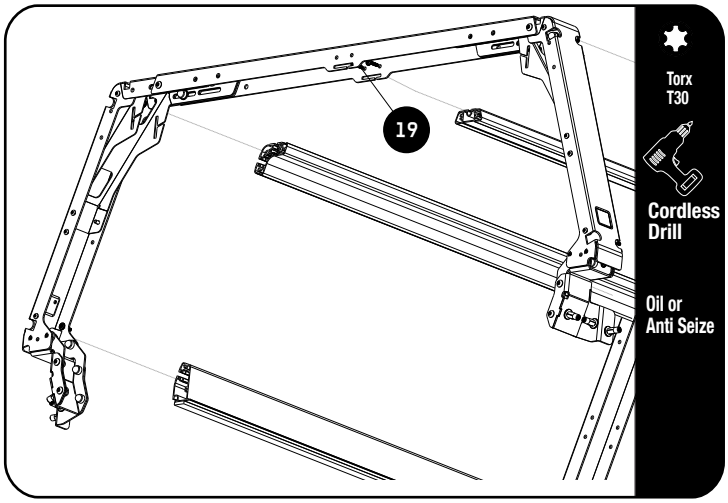

Using the supplied T30 6" torx bit and a cordless driver fit the extrusion using the M6x25 thread forming screws (Item 19).Use a slow and constant speed when using the cordless driver.

Use a little anti seize or oil on screw threads before inserting. Note these are Thread Forming Screws.

Tightening Torque 25Nm / 18.4 ft lbs

© 2023 FRONT RUNNER VEHICLE OUTFITTERS

2 FIT AND SECURE

2.10

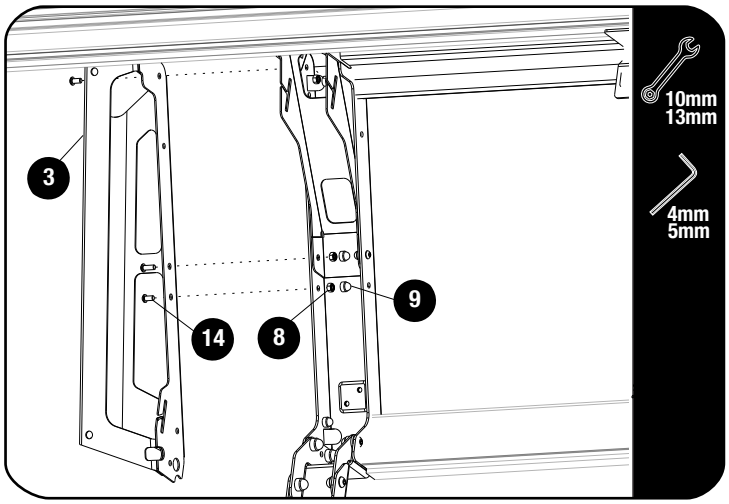

Assemble the Rear Wing Brackets (Item 3) using the M6x12 Button head screws and M6 Nyloc Nuts (Item 14 & 8).

Place the M6 Nut caps (Item 9) over the nyloc nuts.

Tightening Torque:

M6 : 8-10Nm / 5.9 ft lb - 7.38 ft lb

2.11

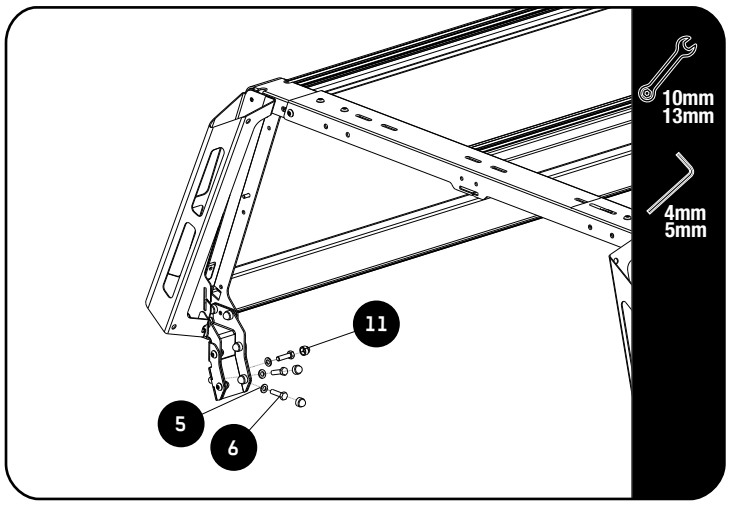

With the Pro Bed Rack sub assembled and with the help of a friend lift and place into position on the load bed.
Push the assembly forward on the bed until the front mounts are up against the front of the bed and aligned with the holes and plus nuts fitted earlier. Mark the four holes on the rear mount brackets onto the rear load bed pillars.
Drill the 4 rear mount holes (2 per side) starting with a 4mm drill and opening up to a 11.5mm.
Install the four plus nuts,
The Pro Bed assembly can now be lifted and placed in position over the bed.
Secure the the rear mounts using M8 x 19 x 2 flat washers and M8x30 Hex Bolts (Item5 & 6)
Secure the front mounts side fixings with M8x19x2 flat washers and M8x30 Hex bolts (Item 5 & 6).

2.12

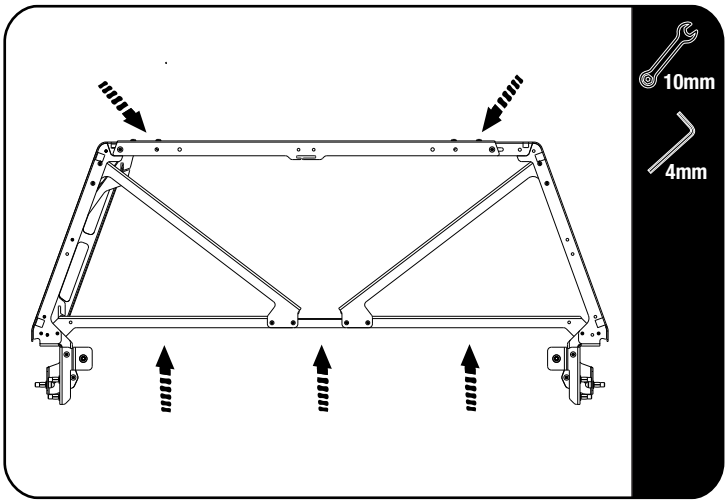

Using clamps and a spirit level clamp the spirit level to the inside of the Front Center Brace and Tighten the M6x20 Button head screws and M6 Nyloc Nuts fitted in 2.3.

Place M6 Nut caps on the M6 Nyloc Nuts.

Fully tighten the top M8 button head bolts..

Tightening Torque:

M8 : 15-20Nm / 11.06 ft lb - 14.75 ft lb

© 2023 FRONT RUNNER VEHICLE OUTFITTERS

2 FIT AND SECURE

2.10

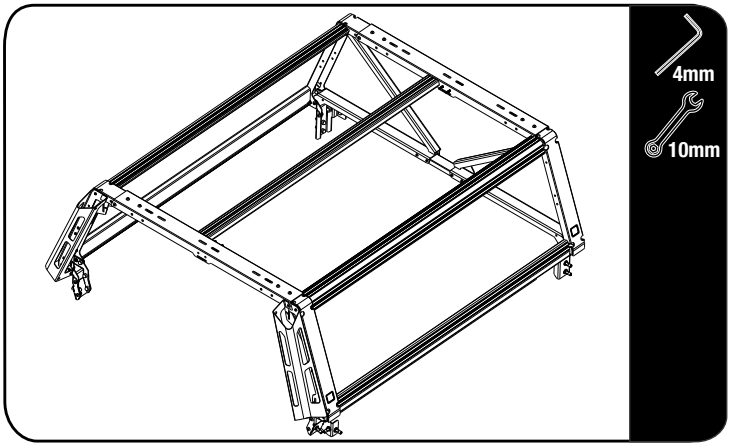

Fully tighten all the bolts and nuts and place nut caps where needed.

3 COMPLETION

3.1 Congratulations! You did it. Take a step back and admire your work!

4 INSTALL OTHER VEHICLE AND RACK ACCESSORIES

Now's the time to visit your favorite Front Runner dealer in person or online.

IMPORTANT!

FRONT RUNNER RACK KITS OFTEN HAVE A HIGHER LOAD RATING THAN THE VEHICLES THEY ARE MOUNTED TO. PLEASE REFER TO YOUR SPECIFIC VEHICLE MANUFACTURER FOR A RECOMMENDED ROOF RATING. FRONT RUNNER CANNOT BE RESPONSIBLE FOR IMPROPER LOADING BEYOND THE VEHICLE MANUFACTURER'S STATED LOAD CAPACITY.

Be sure to tag us. We love to see our gear in action! #FrontRunnerOutfitters #BornToRoam

Share your adventures on:

© 2023 FRONT RUNNER VEHICLE OUTFITTERS